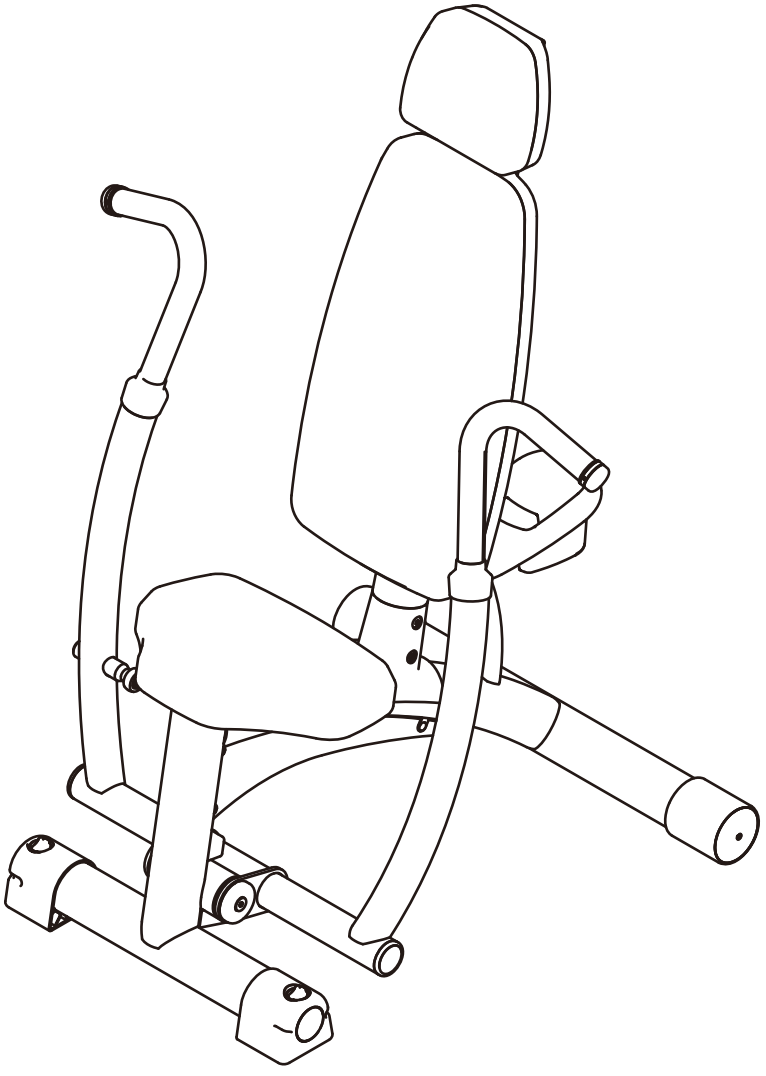

RL8101

Chest Press / Row

Owner's Manual

21J

CAUTION! Read all precautions and instructions in this manual before using this equipment.

Table Of Contents

CAUTION!

Read all precautions and instructions in this manual before using this equipment.

Important Safety Instructions---------- 3

Instructions---------- 5

Exploded View and Parts List---------- 6

Measurement Guide---------- 11

Assembly Instructions---------- 12

Assembly---------- 13

Adjust Instructions---------- 16

Maintenance Schedule---------- 17

General Maintenance Information---------- 18

Weight Training Tips---------- 19

Important Safety Instructions

Before beginning any fitness program, you should obtain a complete physical examination from your physician. When using exercise equipment, basic precautions should always be taken, including the following:

1. Read all instructions before using the equipment.
   These instructions are written to ensure your safety and to protect the unit.

2. Use the equipment only for its intended purpose as described in this guide.
   Do not use accessory attachments that are not recommended by the manufacturer: such attachments might cause injuries.

3. The product should only be used on a level surface and is with 0.5 meters space around the product.
   Do not use the equipment outdoors.

4. Do not allow children on or near the equipment. And children are not allowed to use this equipment.
   Teenagers should use this equipment with adult supervision.

5. Do not overexert yourself or work to exhaustion.
   Do not attempt to lift more weight than you can control safely.
   If you feel any pain or abnormal symptoms, stop your workout immediately and consult your physician.

6. This equipment is not used as medical apparatus and instruments.

7. Never operate the unit when it has been dropped or damaged.
   Never drop or insert anything into any opening in the equipment.
   Always check the unit and its cables before each use. Make sure that all fasteners and cables are secure and in good working condition.
   Frayed or worn cables can be dangerous and may cause injury. Periodically check these cables for any indication of wear.
   Keep hands, limbs, loose clothing and long hair well out of the way of moving parts.

8. Be careful when getting on or off the equipment.

9. Wear proper exercise clothing and shoes for your workout, no loose clothing.

Important Safety Instructions

Personal Safety During Assembly

Read each step in the assembly instructions and follow the steps in sequence. Do not skip ahead. If you skip ahead, you may learn later that you have to disassemble components and that you may have damaged the equipment.

Assemble and operate the equipment on a solid, level surface. Locate the unit a few feet from walls or furniture to provide easy access. The equipment is designed for your enjoyment. By following these precautions and using common sense, you will have many safe and pleasurable hours of healthful exercise with the equipment.

Training Area and Free Area

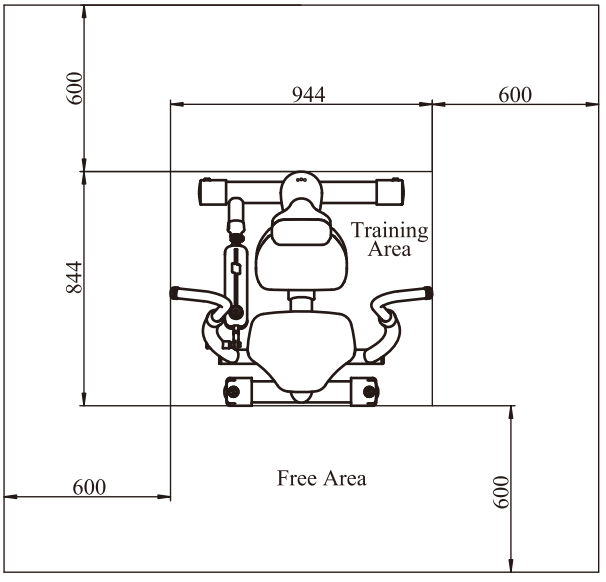

Specifications

Class: S

Maximum User Weight: 150kg/ 330lbs

Product Total Surface: 844*944mm

Product Total Mass:

Instructions

Before beginning assembly please take the time to read instructions thoroughly. Please use the various lists in this manual to make sure that all parts have been included in your shipment. When ordering, use part number and description from the lists. Use only our replacement part when servicing. Failure to do so will void your warranty and could result in personal injury.

The equipment is designed to provide the smoothest, most effective exercise motion possible. After assembly, you should check all functions to ensure correct operation. If you experience problems, first recheck the assembly instructions to locate any possible errors made during assembly. If you are unable to correct the problem, call your authorized dealer. Be sure to have your serial number and this manual when calling. When all parts have been accounted for, continue on.

Tools Required

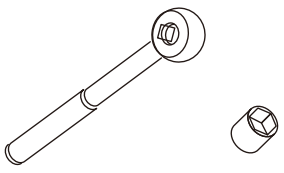

Ratchet Wrench and Socket

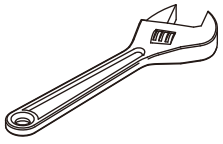

Adjustable Wrench

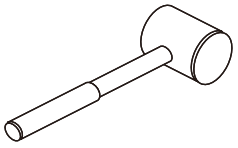

Rubber Mallet

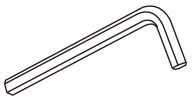

Hex Key Wrench Set

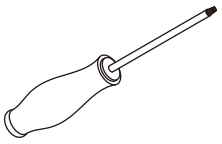

Phillips Screwdriver

Exploded View and Parts List

Overall

Item No.	Grade No.	Part No.	Description	QTY
1	1	RL810101ASSY	Main Frame ASSY	1
2	2	RL810102ASSY	Back Pad Frame ASSY	1
3	3	RL810103ASSY	Arm Frame ASSY	1
4	4	RL81013100	Decorative Sleeve	1
5	5	RL81014000	Cup Holder	1
6	6	RL81015100	Seat Pad	1
7	7	ST56-390SASSY	Hydro-Cylinder ASSY	1
8	8	IF93012600	Axis Φ25*133*M10	1
9	9	IE950716500	Aluminium Cap Φ60*11.6	2
10	10	CNLM10*30*30DN20	Flat Head Cap Screw M10*30	2
11	11	GB70BTM10*105DN18	Socket Head Cap Screw M10*105	1
12	12	GB70BTM10*30DN18	Socket Head Cap Screw M10*30	7
13	13	PNLM10*40N19	Button Head Cap Screw M10*40	1
14	14	GB845ST4.2*16N19	Cross Recessed screw ST4.2*16	4
15	15	GB9510DN2	Flat Washer Φ11*Φ20*2	5
16	16	GB9310N19	Spring Washer Φ10	6
17	17	NM10DN2	Nylon Lock Nut M10	1
18	18	NBS6DS	Hex Key S=6	1
19	19	LW200BS	Wrench Φ6*117	1
20	22	RL81013800	Fixed Button	4
21	23	RL81013700	Decorative Boards	1

Exploded View and Parts List

Overall

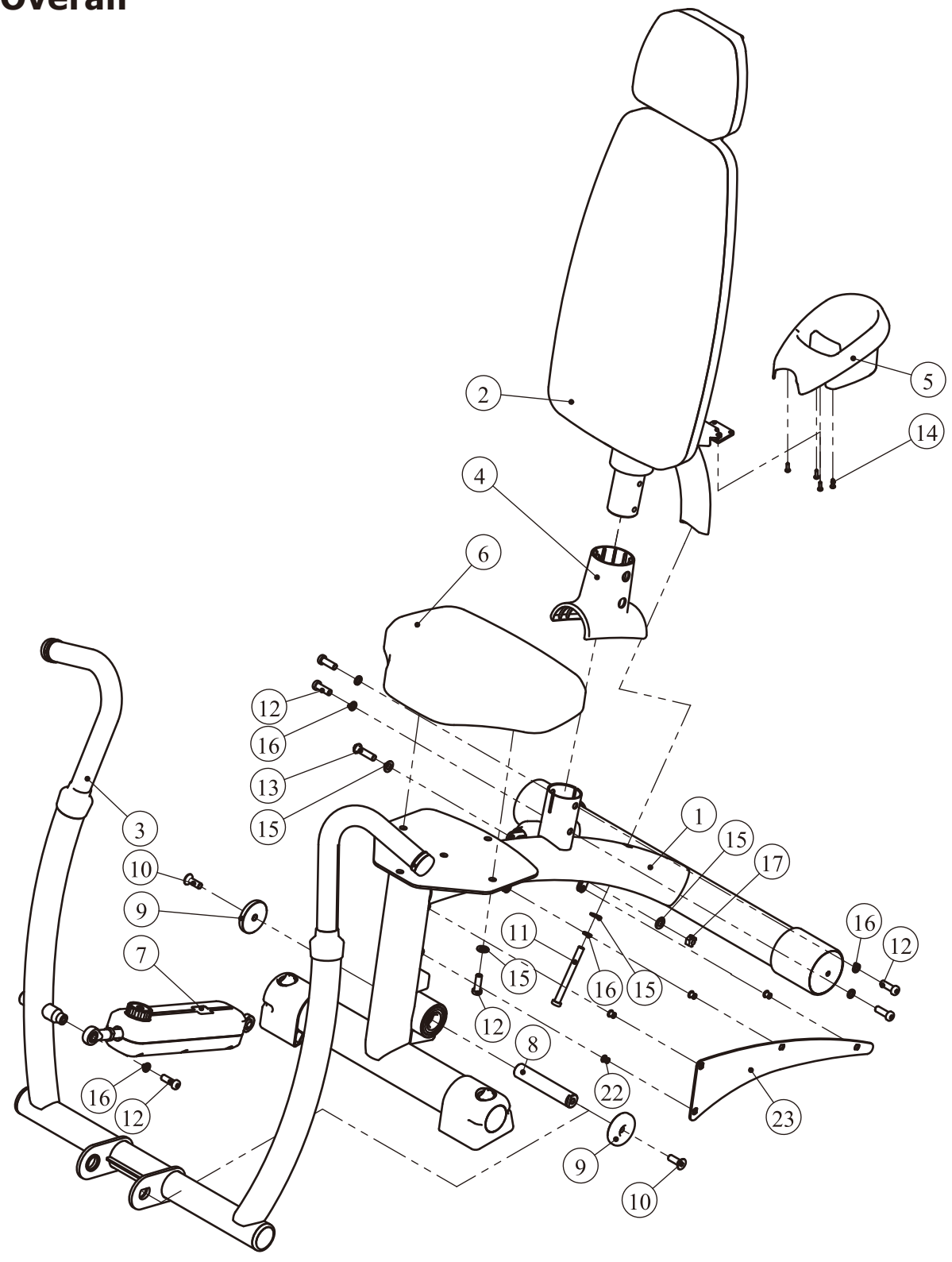

Exploded View and Parts List

Main Frame ASSY

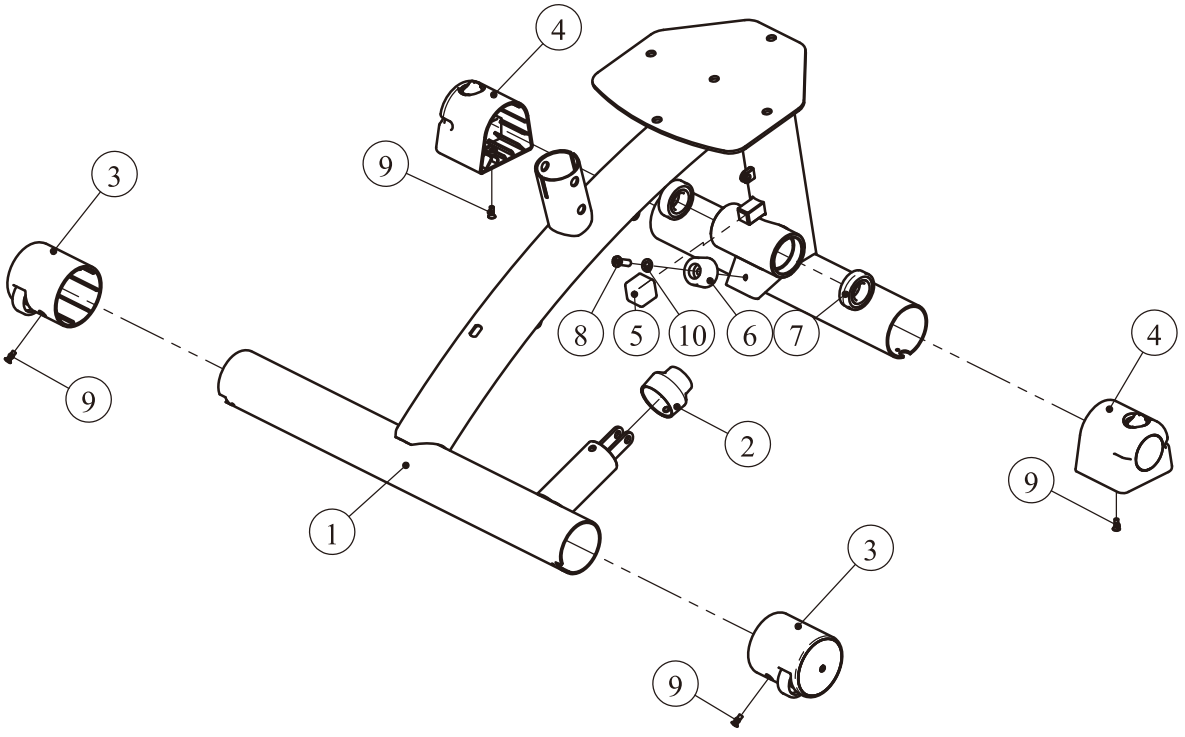

Item No.	Grade No.	Part No.	Description	QTY
1	1.1	RL81010100	Main Frame	1
2	1.2	RL81013400	Connective Sleeve	1
3	1.5	B4001600	Wheel ASSY	2
4	1.6	B4002200	Adjustment ASSY	2
5	1.7	FE97213100	Square Rubber Sleeve	1
6	1.8	KFLPHS4400	Urethane Bumper	1
7	1.9	GB2766205-2ZC3	Deep Groove Ball Bearing Φ25*Φ52*15	2
8	1.10	PNLM8*25*25N19	Button Head Cap Screw M8*25	1
9	1.11	GB819M5*15N19	Cross Recessed screw M5*15	4
10	1.12	GB958N19	Flat Washer Φ9*Φ16*1.5	1

Exploded View and Parts List

Back Pad Frame ASSY

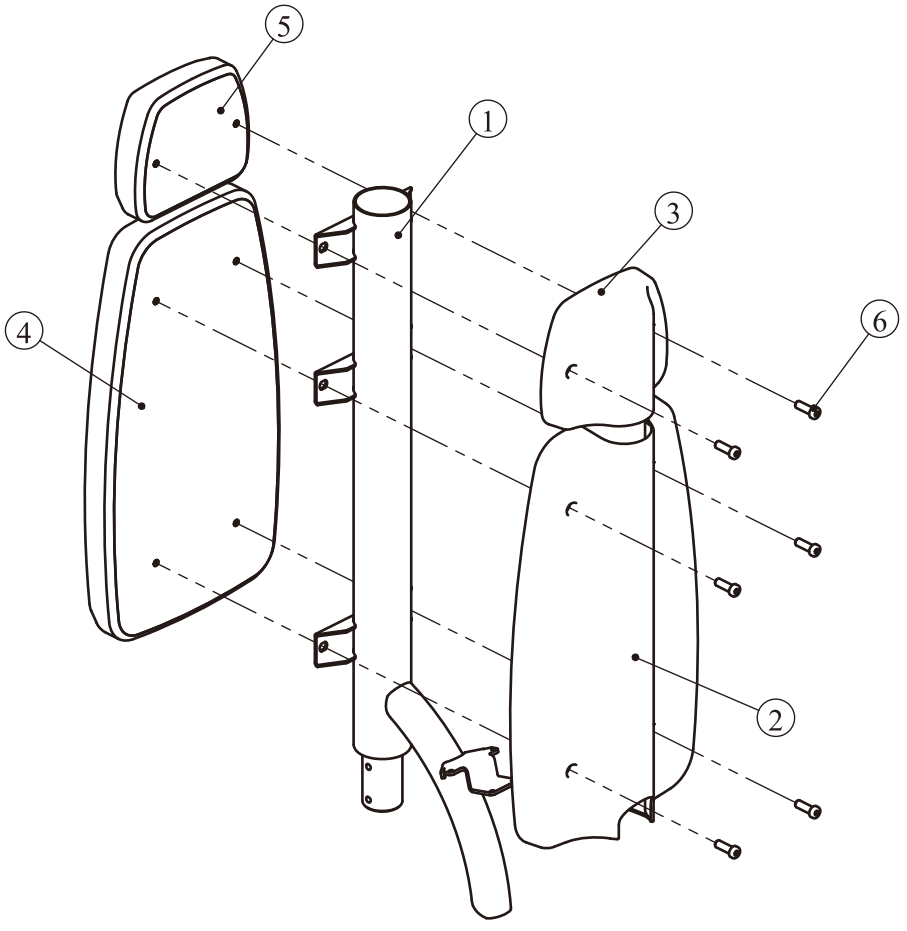

Item No.	Grade No.	Part No.	Description	QTY
1	2.1	RL81010200	Back Pad Frame	1
2	2.2	RL81013200	Back Pad Cover	1
3	2.3	RL81013300	Head Pad Cover	1
4	2.4	RL81015200	Back Pad	1
5	2.5	RL81015300	Head Pad	1
6	2.6	GB70BTM10*30DN18	Socket Head Cap Screw M10*30	6

Exploded View and Parts List

Arm Frame ASSY

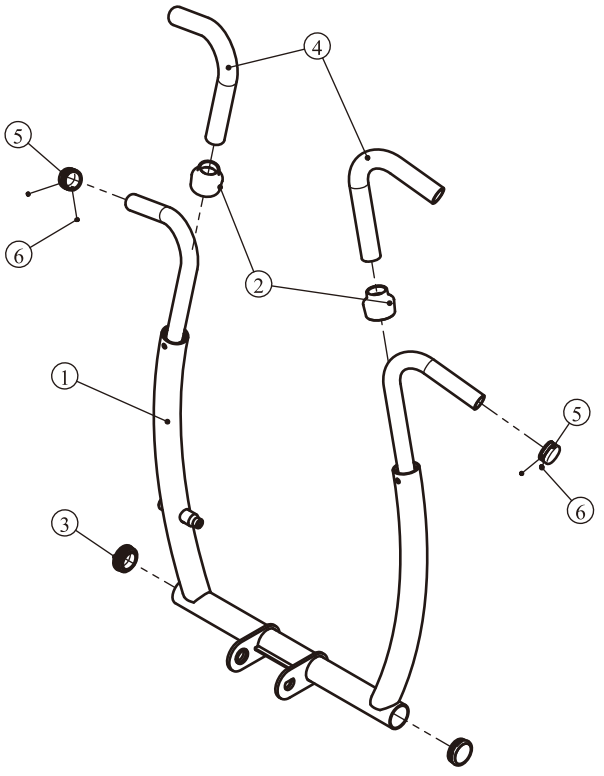

ItemNo.	Grade No.	Part No.	Description	QTY
1	3.1	RL81010300	Arm Frame	1
2	3.2	RL81013400	Connective Sleeve	2
3	3.3	B10009900	Plug Φ50.8	2
4	3.4	026-01PL0235-27	Grip Φ36*Φ29*397	2
5	3.5	CWRVL0011900	Aluminum Grip Cap Φ32	2
6	3.6	YZGB7710-32*3.2N19	Socket Set Screw 10-32UNF*3.2	4

Hydro-Cylinder ASSY

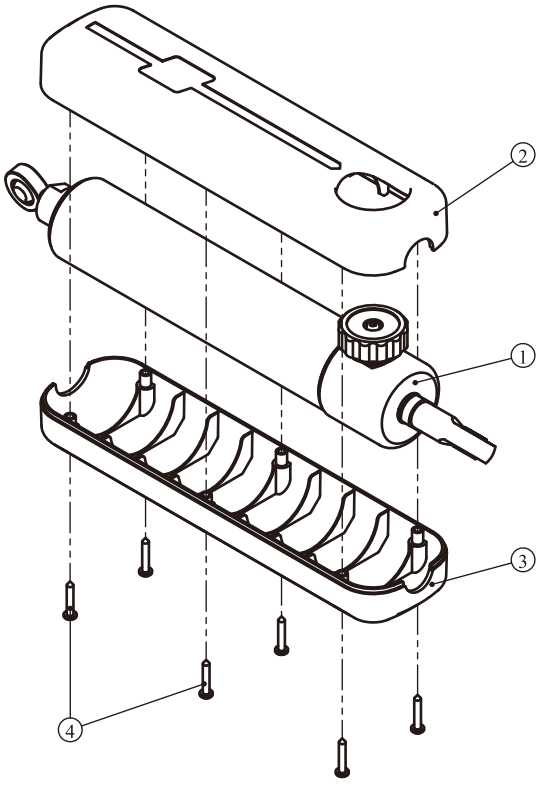

ItemNo.	Grade No.	Part No.	Description	QTY
1	7.1	ST56-390S	Hydro-Cylinder	1
2	7.2	RL81013500	Hydro-Cylinder Cover A	1
3	7.3	RL81013600	Hydro-Cylinder Cover B	1
4	7.4	GB845ST4.2*25DS	Cross Recessed screw ST4.2*25	6

Measurement Guide

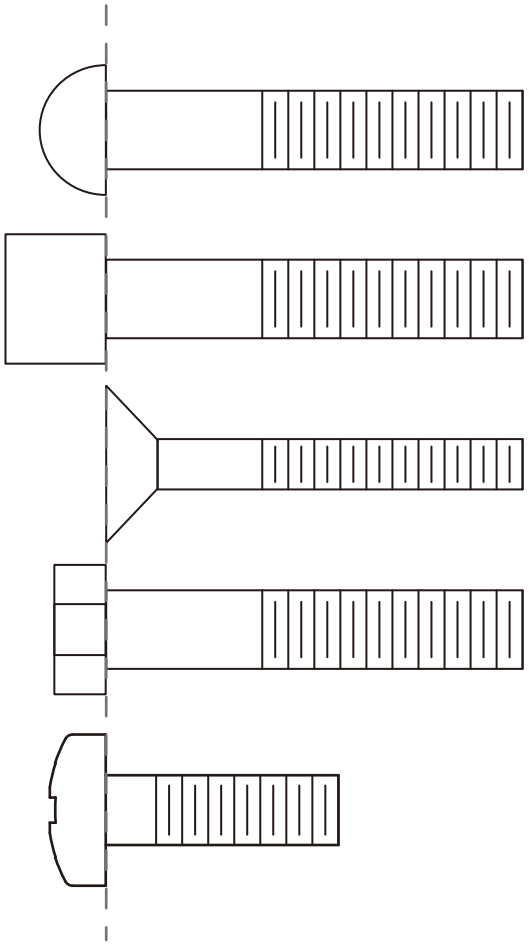

BHCS = Button Head Cap Screw

SHCS = Socket Head Cap Screw

FHCS = Flat Head Cap Screw

HHB = Hex Head Bolt

CRPHS = Cross Recessed Pan Head Screw

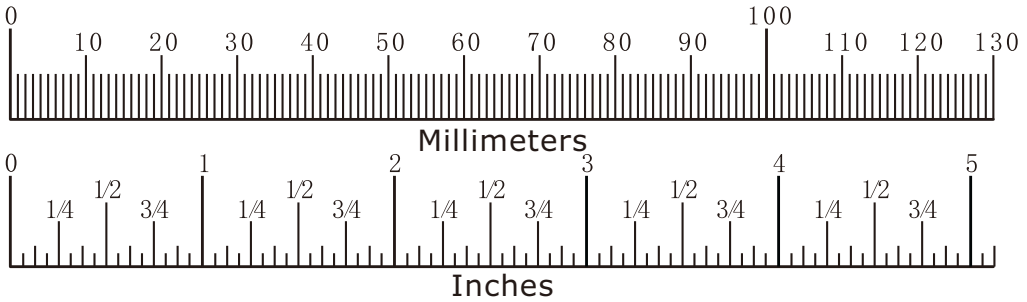

Diameter of bolt (mm/inch)	M6(1/4")	M8(5/16")	M10(3/8")	M12(1/2")	M16(5/8")
Tightening torque (N.m)	9~12	22~30	45~59	78~104	193~257
Operational methods for adult men	The strength of the wrist	The strength of the wrist and forearm	The strength of the entire arm	The strength of the arm and upper body	with all strength

Assembly Instructions

Assembly of the equipment takes professional installers about 2 hours. If this is the first time you have assembled this type of equipment, plan to spend more time. It is strongly recommended to assemble the equipment by professional installers. You may find it quicker, safer, easier to assemble this equipment with the help of a friend, as some of components may be large, heavy or awkward to handle alone. It is important that you assemble your product in a clean, clear, uncluttered area. This will enable you to move around the product while you are fitting components and reduce the possibility of injury during assembly.

⚠ NOTE

As with any assembled part, proper alignment and adjustment is critical. While tightening the fasteners, be sure to leave room for adjustments. Do not fully tighten the fasteners until instructed to do so. Be careful to assemble the components in the sequence presented in this guide.

Assembly

STEP 1

1. Attach the Decorative Sleeve (#4) to the Main Frame ASSY (#1), then attach the Back Pad Frame ASSY (#2) to the Main Frame ASSY (#1) using:
   four M10*30 SHCS (#12)
   five Φ10 Spring Washer (#16)
   one Φ11*Φ20*2 Flat Washer (#15)
   one M10*105 SHCS (#11)
2. Attach the Decorative Boards (#23) to the Main Frame ASSY (#1) using:
   four Fixed Button (#22)

Note: Wrench Tighten Bolts and Nylon Lock Nuts.

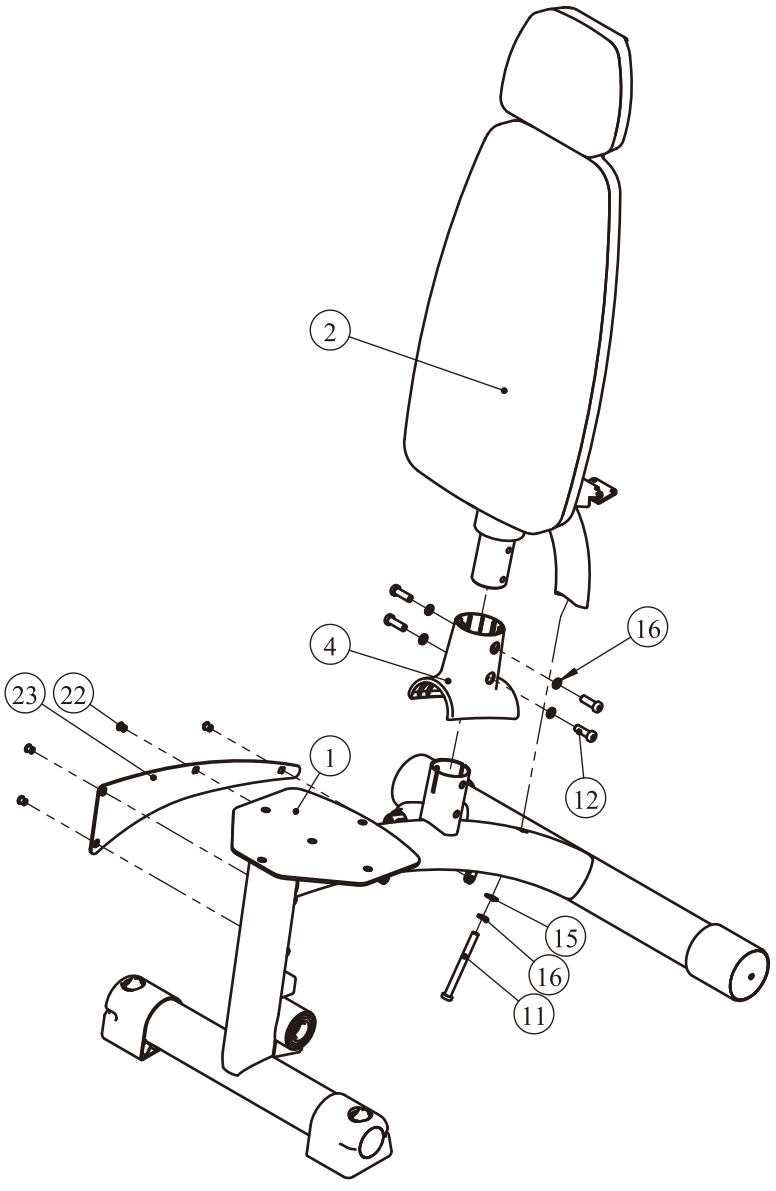

Assembly

STEP 2

1. Attach the Arm Frame ASSY (#3) to the Main Frame ASSY (#1) using:
   two M10*30 FHCS (#10)
   two Φ60 Aluminum Cap (#9)
   one Φ25*133*M10 Axis (#8)
2. Attach the Cup Holder (#5) to the Back Pad Frame ASSY (#2) using:
   four ST4.2*16 Cross Recessed screw (#14)

Note: Wrench Tighten Bolts and Nylon Lock Nuts.

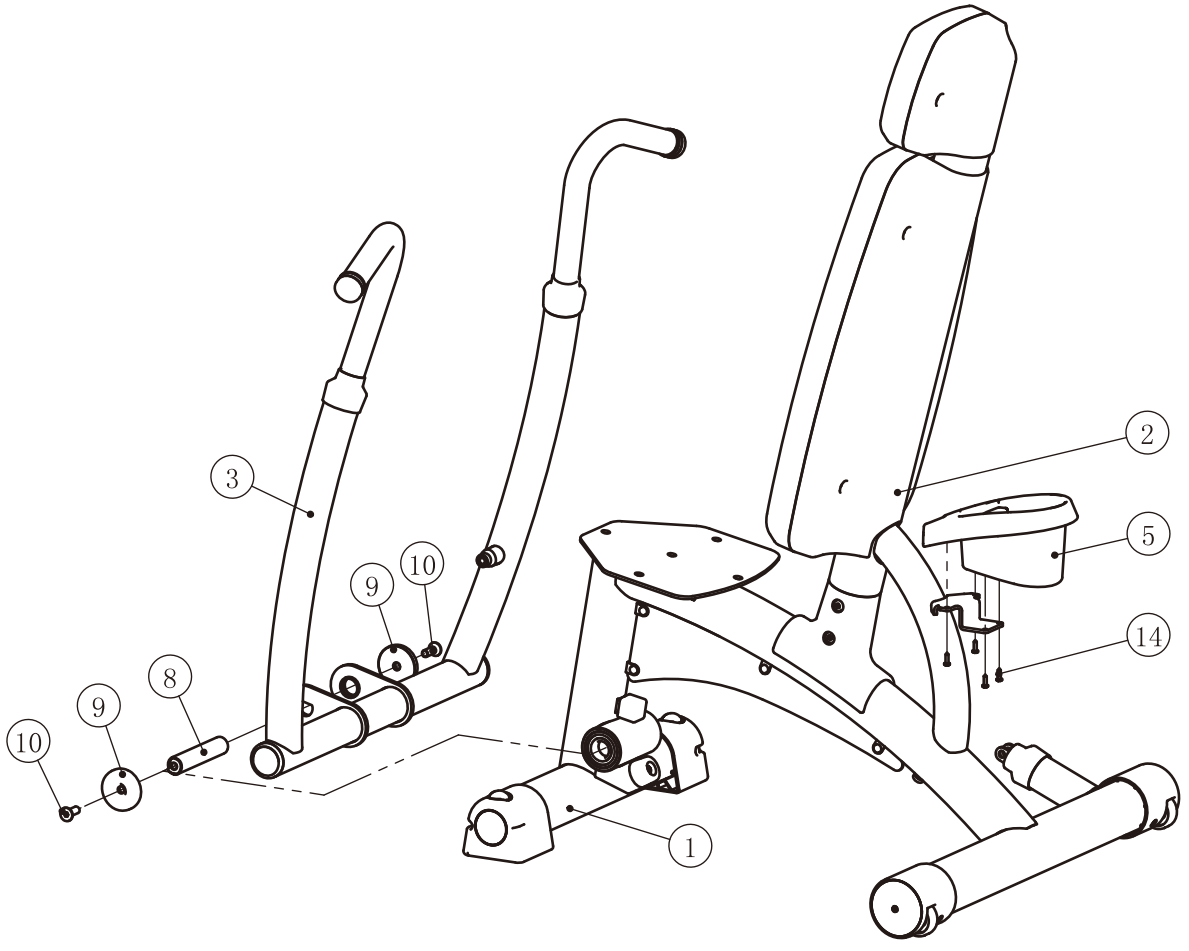

Assembly

STEP 3

1. Attach the Hydro-Cylinder ASSY (#7) to the Main Frame ASSY (#1) and Arm Frame ASSY (#3) using:
   one M10*30 SHCS (#12) one Φ10 Spring Washer (#16)
   two Φ11*Φ20*2 Flat Washer (#15) one M10*40 BHCS (#13)
   one M10 Nylon Lock Nut (#17)
2. Attach the Seat Pad (#6) to the Main Frame ASSY (#1) using:
   two M10*30 SHCS (#12) two Φ11*Φ20*2 Flat Washer (#15)

Note:

1. Wrench Tighten Bolts and Nylon Lock Nuts.

2. Before using the machine, please make sure the Adjustment Knob upwards and tighten the HEX Nut.

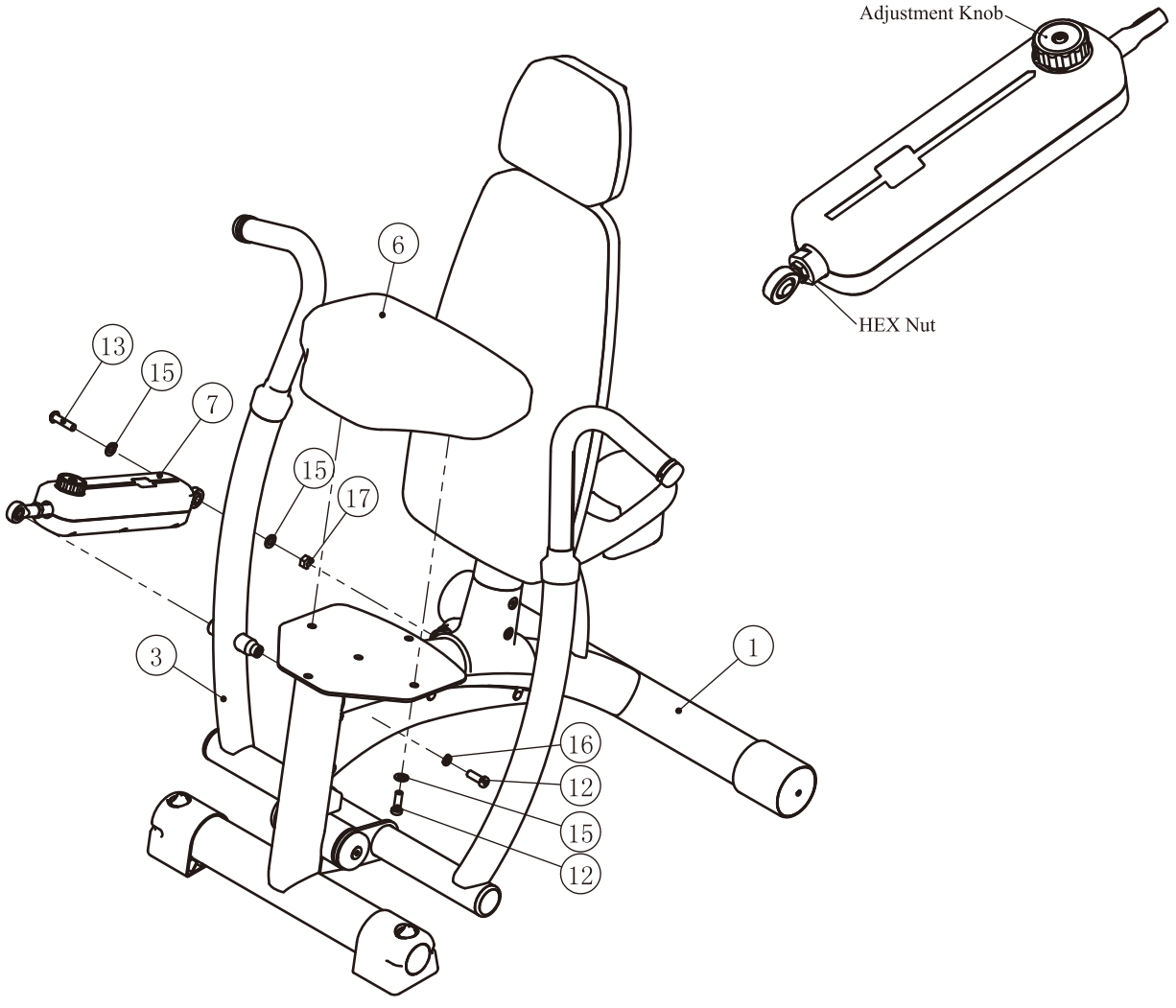

Adjust Instructions

Instructions

1. Select an appropriate Lever by Adjusting the Adjustment Knob.
2. Make sure the Adjustment Knob upwards.
3. The moving wheels are of benefit when you adjust the machine's position.

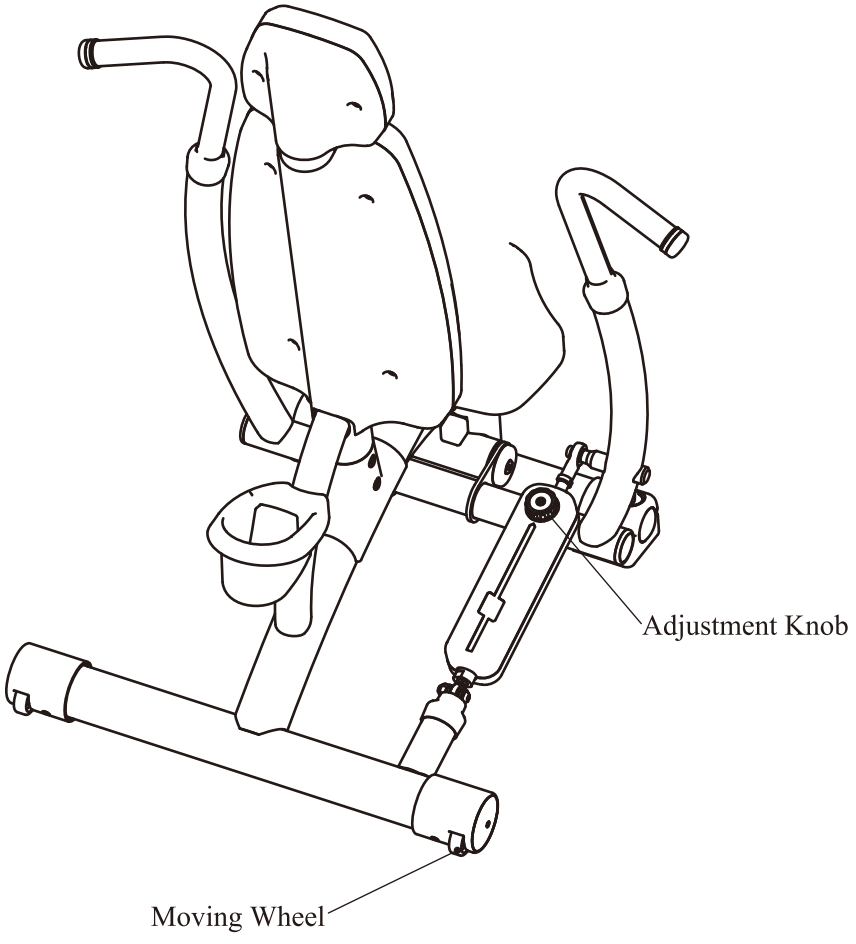

Maintenance Schedule

ROUTINE	COMMERCIAL MAINTENANCE	HOME MAINTENANCE	LATEST DATE ENTRY						
Inspect; Links, Pull Pins, Snap Locks, Swivels, Weight Stack Pins	DAILY	WEEKLY							
Clean; Upholstery	DAILY	WEEKLY							
Inspect; Cables or Belts and their tension	DAILY	WEEKLY							
Inspect; Accessory Bars, and Handles	WEEKLY	3 MONTHS							
Inspect; All Decals	WEEKLY	3 MONTHS							
Inspect; All Nuts and Bolts, Tighten if needed	WEEKLY	3 MONTHS							
Inspect; Anti-Skid Surface	WEEKLY	3 MONTHS							
Clean & Lubricate; Guide Rods with a Teflon (PTFE) based lubricant (Superlube)	MONTHLY	3 MONTHS							
Lubricate; Seat Sleeves, Turcite Bushings, Linear Bearing	MONTHLY	3 MONTHS							
Clean and Wax; All Glossy Finishes	6 MONTHS	YEARLY							
Repack with Grease; Linear Bearings	6 MONTHS	YEARLY							
Replace; Cables, Belts and Connecting Parts	YEARLY	3 YEARS							

Your equipment comes with a commercial maintenance decal. For personal, in home use, please follow the home maintenance schedule listed above.

General Maintenance Information

Links, Pull-Pins, Snap Hooks, Swivels, Weight Stack Pins:
* Check all pieces for signs of visible wear or damage.
* Check springs in snap hooks and pull-pins for proper tension and alignment.
* If the spring sticks or has lost its rigidity, replace it immediately.

Upholstery:
* To ensure prolonged upholstery life and proper hygiene, all upholstered pads should be wiped down with a damp cloth after every workout.
* Periodically take the time to use a mild soap or an approved vinyl upholstery cleaner to deter the onset of cracking or drying. Avoid using any abrasive cleaners or cleaners not intended for use on vinyl.
* Replace ripped or warn upholstery immediately.
* Keep sharp or pointed objects clear of all upholstery.

Decals:
* Inspect and familiarize yourself with any safety warnings or other user information posted on each decal.

Nuts and Bolts:
* Inspect all nuts and bolts for any loosening and tighten if needed.
* Go through a re-tightening sequence periodically to ensure that all hardware is tensioned proper.

Anti-Skid Surfaces:
* These surfaces are designed to supply secure footing and need to be replaced if they appear worn or become slippery.

Belts and Cables:
* We uses only high quality belt, and mil-spec cables.
* Visually inspect the belts and cables for fraying, cracking, peeling or discoloration.
* While the machine is not in use, carefully run your fingers along the belt or cable to feel for thinning or bulging areas.
* Replace belts and cables immediately at the first signs of damage or wear. Do not use equipment until belts or cables have been replaced.

Belt and Cable Tension:
* Referring to the Owners Manual, when belts or cables are used check all bolts attachments to be sure they are properly attached.
* Check slack in cables and re-adjust cable tension if needed.

Seat Sleeves, Guide Rods:
* Wipe down adjusting tubes with a dust free rag before applying lubricant.
* Lubricate seat sleeves and Guide Rods with a Silicon or Teflon based lubricant spray.

Linear Bearings:
* Referring to the Owners Manual carefully disassemble the bearing from its housing and place a finger full of light grease (lithium, super lube, etc.) into the inside of the bearing. Using your finger, press the grease into the ball-bearings and their tracks. repeat until the ball-bearing tracks are full of grease. Insert the shaft back into the bearing and wipe off excess grease.

PLEASE KEEP THIS FOR YOUR RECORDS

Weight Training Tips

Use this manual to guide you through the basic exercises you can perform on your equipment. To gain maximum results and avoid possible injury, consult a fitness professional to develop your complete exercise program.

Always consult your physician before starting any exercise program.

To be successful in your exercise program, it is important to develop an understanding of the basic principles of strength training. Now that you have your equipment, it is only natural that you want to get started immediately. First, determine a set of realistic goals and objectives for yourself. By deciding on an exercise plan that is right for you prior to starting, you will contribute significantly to your success.

Warm up properly before engaging in weight resistance training. Stretching, yoga, jogging, calisthenics or other cardiovascular exercise can help prepare your body for the heavier workload of lifting weights.

Learn how to perform the exercise correctly before using heavy weight. Correct form is important to avoid injury and to ensure that you work the proper muscle groups.

Know your limitations. If you are new to weight training or are embarking on an exercise regimen after a long layoff, start slowly and build foundational strength over a longer period of time.

Pay attention to your breathing. Exhale when you exert is a general rule of thumb. Never hold your breath.

SYSTEM CERTIFICATION ISO 9001 SGS
SYSTEM CERTIFICATION ISO 14001 SGS
SYSTEM CERTIFICATION OHSAS 18001 SGS
SYSTEM CERTIFICATION ISO 10015 SGS